USER MANUAL

ROGUE R1 BEAM WASH

CHAUVET PROFESSIONAL

Edition Notes

The Rogue R1 Beam Wash User Manual includes a description, safety precautions, installation, programming, operation and maintenance instructions for the Rogue R1 Beam Wash as of the release date of this edition.

Trademarks

CHAUVET, the Chauvet logo and Rogue R1 Beam Wash are registered trademarks or trademarks of Chauvet & Sons, LLC (d/b/a Chauvet and Chauvet Lighting) in the United States and other countries. Other company and product names and logos referred to herein may be trademarks of their respective companies.

Copyright Notice

The works of authorship contained in this manual, including, but not limited to, all design, text and images are owned by Chauvet.

© Copyright 2020 Chauvet & Sons, LLC. All rights reserved.

Electronically published by Chauvet in the United States of America.

Manual Use

Chauvet authorizes its customers to download and print this manual for professional information purposes only. Chauvet expressly prohibits the usage, copy, storage, distribution, modification, or printing of this manual or its content for any other purpose without written consent from Chauvet.

Document Printing

For best results, print this document in color, on letter size paper (8.5 x 11 in), double-sided. If using A4 paper (210 x 297 mm), configure the printer to scale the content accordingly.

Intended Audience

Any person installing, operating, and/or maintaining this product should completely read through the guide that shipped with the product, as well as this manual, before installing, operating, or maintaining this product.

Disclaimer

Chauvet believes that the information contained in this manual is accurate in all respects. However, Chauvet assumes no responsibility and specifically disclaims any and all liability to any party for any loss, damage or disruption caused by any errors or omissions in this document, whether such errors or omissions result from negligence, accident or any other cause. Chauvet reserves the right to revise the content of this document without any obligation to notify any person or company of such revision, however, Chauvet has no obligation to make, and does not commit to make, any such revisions. Download the latest version from www.chauvetprofessional.com.

Document Revision

This Rogue R1 Beam Wash User Manual is the 1st edition of this document. Go to www.chauvetprofessional.com for the latest version.

TABLE OF CONTENTS

1. Before You Begin 1
What Is Included 1
Claims 1
Text Conventions 1
Symbols 1
FCC Compliance 1
Safety Notes 2
Personal Safety 2
Mounting and Rigging 2
Power and Wiring 2
Operation 2
Expected LED Lifespan 2
2. Introduction 3
Description 3
Features 3
Product Overview 3
Product Dimensions 4
3. Setup 5
AC Power 5
AC Plug 5
Power Linking 5
Fuse Replacement 5
Remote Device Management (RDM) 5
Mounting 6
Orientation 6
Rigging 6
Procedure 6
4. Operation 7
Control Panel Description 7
Control Options 7
Programming 7
Menu Map 7
Configuration (DMX) 9
Control Personalities 9
Starting Address 9
Control Channel Assignments and Values 10
Color Chart 10
21CH 11
19CH 13
15CH 15
14CH 17
Configuration (Settings) 18
Pan Reverse 18
Tilt Reverse 18
Pan Angle 18
Tilt Angle 18

Fan Mode 19
Display Backlight 19
Screen Reverse 19
Dimmer Curve 19
Dimmer Speed 19
Pulse-Width Modulation Options 19
LED Power (Legacy Mode) 19
White Mode 19
Color Calibration 20
Reset Function 20
Factory Reset 20
Test Mode 20
Auto Test 20
Manual Test 20
System Information 20
Offset Mode (Zero Adjust) 20
5. Maintenance 21
Product Maintenance 21
6. Technical Specifications 22
7. Returns 23
8. Contact Us 24

1. Before You Begin

What Is Included

- Rogue R1 Beam Wash
- Neutrik® powerCON® power cord
- Omega bracket with mounting hardware
- Quick Reference Guide

Claims

Carefully unpack the product immediately and check the container to make sure all the parts are in the package and are in good condition.
If the box or the contents (the product and included accessories) appear damaged from shipping, or show signs of mishandling, notify the carrier immediately, not Chauvet. Failure to report damage to the carrier immediately may invalidate your claim. In addition, keep the box and contents for inspection.
For other issues, such as missing components or parts, damage not related to shipping, or concealed damage, file a claim with Chauvet within 7 days of delivery.

Text Conventions

Convention	Meaning
1–512	A range of values
50/60	A set of values of which only one can be chosen
Settings	A menu option not to be modified
<ENTER>	A key to be pressed on the product's control panel

Symbols

Symbol	Meaning
	Critical installation, configuration, or operation information. Not following these instructions may make the product not work, cause damage to the product, or cause harm to the operator.
	Important installation or configuration information. The product may not function correctly if this information is not used.
	Useful information.

Any reference to data or power connections in this manual assumes the use of Seetronic IP rated cables.

The term "DMX" used throughout this manual refers to the USITT DMX512-A digital data transmission protocol.

FCC Compliance

This device complies with Part 15 Part B of the FCC Rules. Operation is subject to the following two conditions:

1. This device may not cause harmful interference, and
2. This device must accept any interference received, including interference that may cause undesired operation.

Any changes or modifications not expressly approved by the party responsible for compliance could void the user's authority to operate the equipment.

Safety Notes

Read all the following safety notes before working with this product. These notes contain important information about the installation, usage, and maintenance of this product.

This product contains no user-serviceable parts. Any reference to servicing in this User Manual will only apply to properly trained, certified technicians. Do not open the housing or attempt any repairs.

All applicable local codes and regulations apply to proper installation of this product.

Personal Safety

- Avoid direct eye exposure to the light source while the product is on.
- Always disconnect the product from the power source before cleaning or replacing the fuse.
- Always connect the product to a grounded circuit to avoid the risk of electrocution.
- Do not touch the product's housing when operating because it may be very hot.

Mounting and Rigging

- This product is not intended for permanent installation.
- This product is for indoor use only! To prevent risk of fire or shock, do not expose this product to rain or moisture. (IP20)
- CAUTION: When transferring product from extreme temperature environments, (e.g. cold truck to warm humid ballroom) condensation may form on the internal electronics of the product. To avoid causing a failure, allow product to fully acclimate to the surrounding environment before connecting it to power.
- Mount this product in a location with adequate ventilation, at least 20 in (50 cm) from adjacent surfaces.
- Make sure there are no flammable materials close to this product while it is operating.
- When hanging this product, always secure to a fastening device using a safety cable.
- Never carry the product by the power cord.

Power and Wiring

- Make sure the power cord is not crimped or damaged.
- Always make sure you are connecting this product to the proper voltage in accordance with the specifications in this manual or on the product's specification label.
- To eliminate unnecessary wear and improve its lifespan, during periods of non-use completely disconnect the product from power via breaker or by unplugging it.
- Never connect this product to a dimmer pack or rheostat.
- Make sure to replace the fuse with another of the same type and rating.
- Never disconnect this product by pulling or tugging on the power cable.

Operation

- Do not operate this product if there is damage on the housing, lenses, or cables. Have the damaged parts replaced by an authorized technician at once.
- Do not cover the ventilation slots when operating to avoid internal overheating.
- The maximum ambient temperature is 113 °F (45 °C). Do not operate the product at higher temperatures.
- The minimum startup temperature is -4°F (-20°C). Do not start the product at lower temperatures.
- The minimum ambient temperature is -22°F (-30°C). Do not operate the product at lower temperatures.
- In the event of a serious operation problem, stop using this product immediately!

If your Chauvet product requires service, contact Chauvet Technical Support.

Expected LED Lifespan

Over time, use and heat will gradually reduce LED brightness. Clustered LEDs produce more heat than single LEDs, contributing to shorter lifespans if always used at full intensity. The average LED lifespan is 40,000 to 50,000 hours. To extend LED lifespan, maintain proper ventilation around the product, and limit the overall intensity.

2. Introduction

Description

The Rogue R1 Beam Wash is a versatile and compact moving head that projects a punchy beam and wash. Weighing just under 12 lbs., it features a custom-designed optical system with seven 40W RGBW LEDs and a zoom range of 5° to 58.2° that allows it to project tight, solid beam effects at its most narrow and transforms the light source into an even wash with excellent color blending as it expands. The small size of the Rogue R1 Beam Wash also allows for fast and smooth pan and tilt movement.

Features

- 7 RGBW LEDs, 40 W each
- 5-pin DMX input/output connections
- Unique lens design for excellent color blending and tight beam effects
- Fast, smooth pan and tilt movement
- 6 distinct dimming modes for advanced control
- Omega mounting bracket fits all Rogue and Maverick fixtures
- Easy to read OLED display with simple, effective menu options
- Simple and complex DMX channel profiles for programming versatility

Product Overview

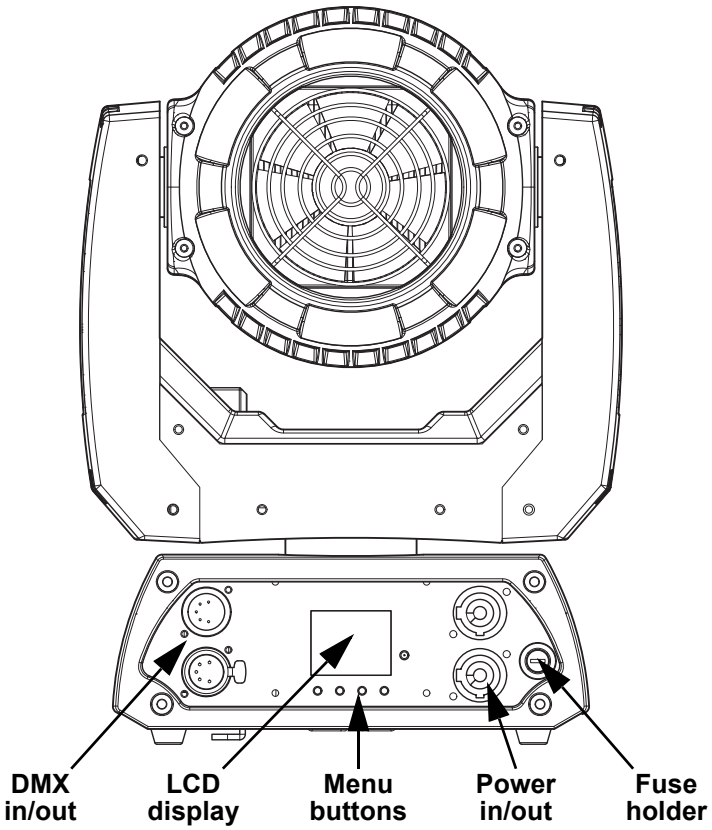

Product Dimensions

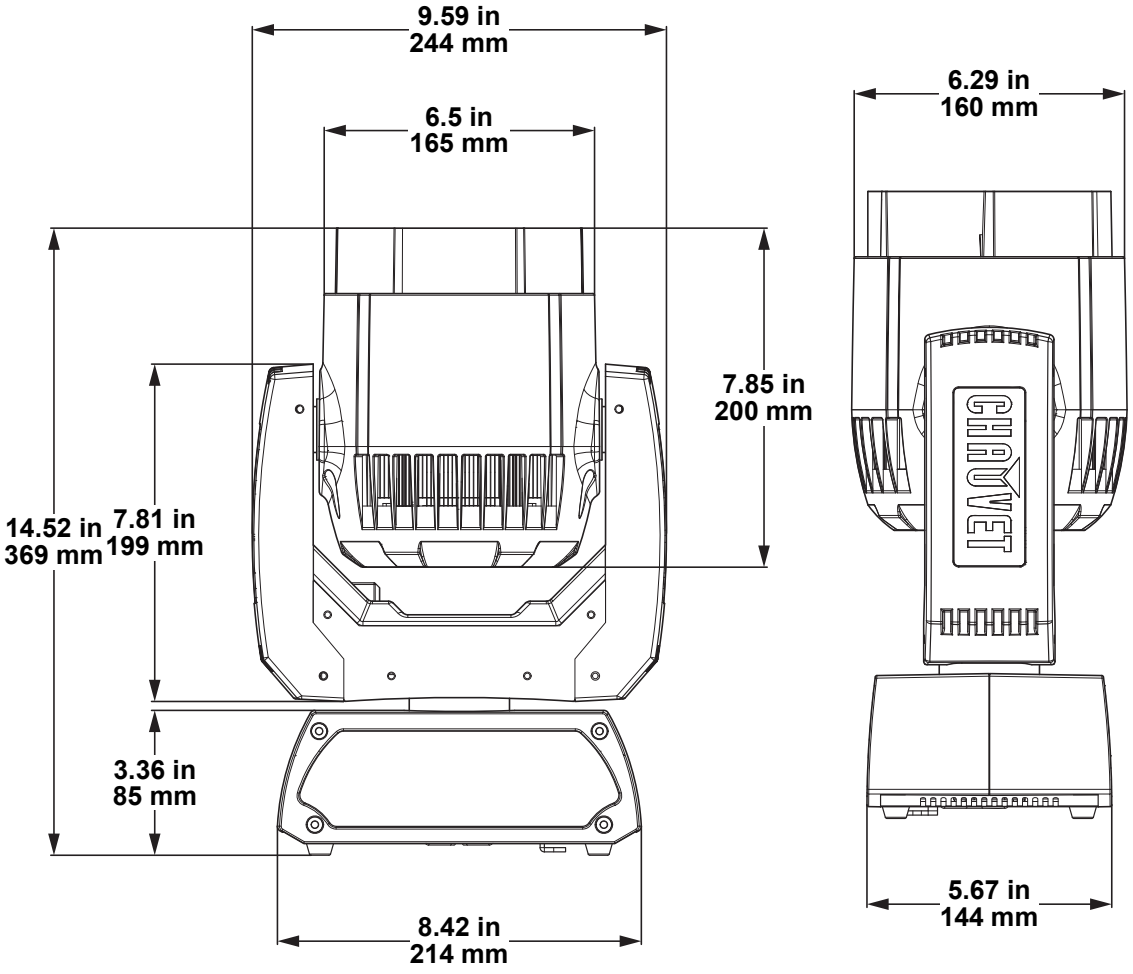

When designing case inserts, make sure the dimensions are given with the zoom out, as shown above.

3. Setup

AC Power

The Rogue R1 Beam Wash has an auto-ranging power supply and it can work with an input voltage range of 100 to 240 VAC, 50/60 Hz.

To determine the product's power requirements (circuit breaker, power outlet, and wiring), use the current value listed on the label affixed to the product's back panel, or refer to the product's specifications chart. The listed current rating indicates the product's average current draw under normal conditions.

- **Always connect the product to a protected circuit (a circuit breaker or fuse). Make sure the product has an appropriate electrical ground to avoid the risk of electrocution or fire.**
- **To eliminate unnecessary wear and improve its lifespan, during periods of non-use completely disconnect the product from power via breaker or by unplugging it.**

Never connect the product to a rheostat (variable resistor) or dimmer circuit, even if the rheostat or dimmer channel serves only as a 0 to 100% switch.

AC Plug

The Rogue R1 Beam Wash comes with a power input cord terminated with a Neutrik® powerCON® connector on one end and an Edison plug on the other end (U.S. market). If the power input cord that came with your product has no plug, or if you need the change the plug, use the table below to wire the new plug.

Connection	Wire (U.S.)	Wire (Europe)	Screw Color
AC Live	Black	Brown	Yellow or Brass
AC Neutral	White	Blue	Silver
AC Ground	Green/Yellow	Green/Yellow	Green

Power Linking

The product supports power linking. You can power link up to 5 products at 120 V; up to 9 at 208 V; or up to 11 at 230 V.

This product comes with a power input cord. Power linking cables are available from Chauvet for purchase.

Fuse Replacement

1. Disconnect this product from the power outlet.
2. Using a flat-head screwdriver, unscrew the fuse holder cap from the housing.
3. Remove the blown fuse and replace with another fuse of the same type and rating (F 20 A, 250 V).
4. Screw the fuse holder cap back in place and reconnect power.

Remote Device Management (RDM)

Remote Device Management, or RDM, is a standard for allowing DMX-enabled devices to communicate bi-directionally along existing DMX cabling. Check the DMX controller's User Manual or with the manufacturer as not all DMX controllers have this capability. The Rogue R1 Beam Wash supports RDM protocol that allows feedback to make changes to menu map options.

Mounting

Before mounting the product, read and follow the safety recommendations indicated in the Safety Notes. For our CHAUVET Professional line of mounting clamps, go to http://trusst.com/products/.

Orientation

Always mount this product in a safe position, making sure there is adequate room for ventilation, configuration, and maintenance.

Rigging

Chauvet recommends using the following general guidelines when mounting this product.

- Before deciding on a location for the product, make sure there is easy access to the product for maintenance and programming purposes.
- Make sure that the structure onto which you are mounting the product can support the product's weight. See the Technical Specifications for weight information.
- When mounting the product overhead, always use a safety cable. Mount the product securely to a rigging point, whether an elevated platform or a truss.
- When rigging the product onto a truss, use a mounting clamp of appropriate weight capacity.

Procedure

The Rogue R1 Beam Wash comes with a bracket to which you can attach a mounting clamp directly. Mounting clamps are sold separately. Make sure the clamps are capable of supporting the weight of this product. Use at least two mounting points per product. For the CHAUVET Professional line of mounting clamps, go to http://www.trusst.com/products.

Mounting Diagram

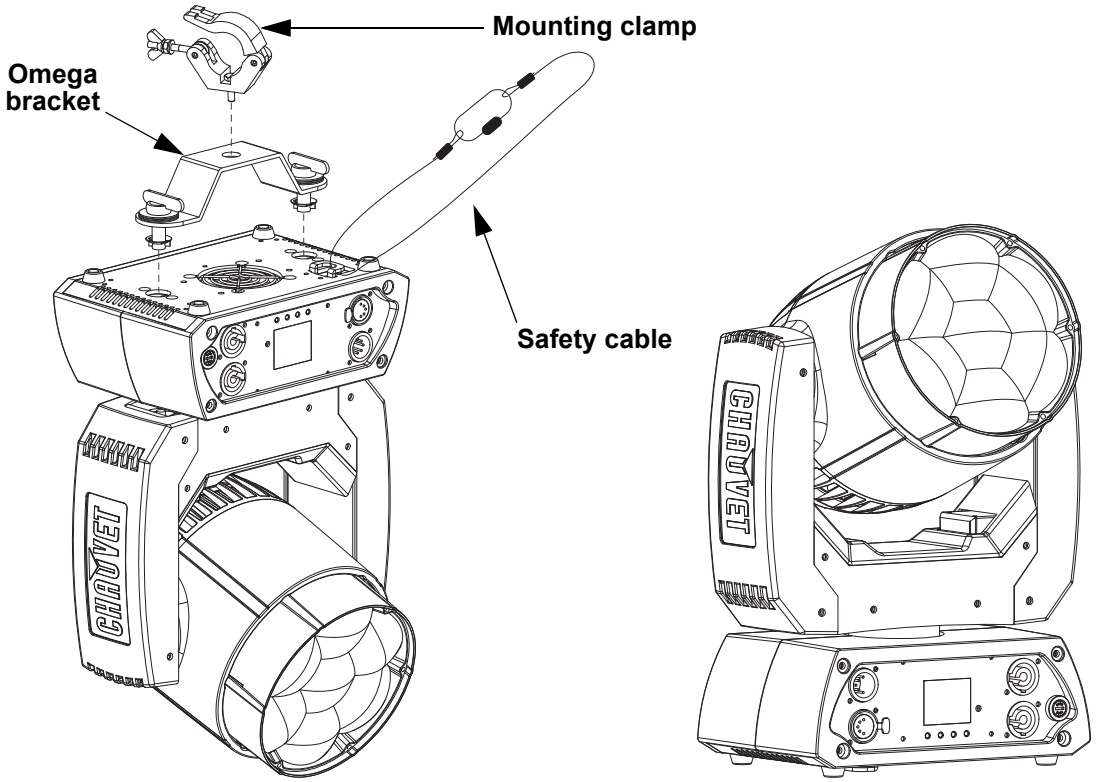

Overhead mounting **Floor mounting**

4. Operation

Control Panel Description

Button	Function
<MENU>	Exits from the current menu or function
<UP>	Enables the currently displayed menu or sets the currently selected value in to the current function
<DOWN>	Navigates upward through the menu list or increases the numeric value when in a function
<ENTER>	Navigates downward through the menu list or decreases the numeric value when in a function

Control Options

Set the Rogue R1 Beam Wash starting address in the 001–512 DMX range. This enables control of up to 24 products in the 21-channel **21CH** personality.

Programming

Refer to the Menu Map to understand the menu options. The menu map shows the main level and a variable number of programming levels for each option.

- To go to the desired main level, press **<MENU>** repeatedly until the option shows on the display. Press **<ENTER>** to select. This will take you to the first programming level for that option.
- To select an option or value within the current programming level, press **<UP>** or **<DOWN>** until the option shows on the display. Press **<ENTER>** to select. In this case, if there is another programming level, you will see that first option, or you will see the selected value.
- Press **<MENU>** repeatedly to exit to the previous main level.

Menu Map

Refer for the Rogue R1 Beam Wash product page on www.chauvetprofessional.com for the latest menu map.

Main Level	Programming Levels			Description
Address	**001–512**			Sets the starting address
Run Mode	**DMX**	**14CH**		Selects the DMX personality
		15CH		
		19CH		
		21CH		
	Auto Test			Auto test all functions
	Manual Test	**Pan**	**000–255**	Manually control and test all settings through the control panel
		Tilt		
		Dimmer		
		Shutter		
		Red		
		Green		
		Blue		
		White		
		Zoom		
Setup	**Pan Reverse**	**OFF**		Normal pan
		ON		Reversed pan
	Tilt Reverse	**OFF**		Normal tilt
		ON		Reversed tilt
	Pan Angle	**540**		540° pan range
		360		360° pan range
		180		180° pan range
	Tilt Angle	**230**		230° tilt range
		180		180° tilt range
		90		90° tilt range

Main Level	Programming Levels				Description
Setup (cont.)	**Fans**	**Auto**			Fan speed according to product temperature
		ECO			Quiet mode
		Full			Fan speed set on high
	Display	**OFF**			Display turns off
		ON			Display stays on
	Screen Rev	**OFF**			Normal display
		ON			Inverted display
	Dimmer Curve	**Linear**			Set the dimmer curve
		Square			
		I Squa			
		SCurve			
	Dimmer Speed	**Smooth**			Smooth dimmer speed
		Fast			Fast dimmer speed
	PWM Option	**600Hz**			Sets the PWIM frequency
		1200Hz			
		4000Hz			
		6000Hz			
		15000Hz			
	LED R POWER	**050–100**			Adjusts LED power levels for matching to legacy Rogue Wash products
	LED G POWER	**050–100**			
	LED B POWER	**050–100**			
	LED W POWER	**050–100**			
	White Mode	**On**			Calibrates white to 7500K
		Off			Uses maximum output values
		Custom	**RED**	**000–255**	Sets red LED maximum value
			GREEN		Sets green LED maximum value
			BLUE		Sets blue LED maximum value
			WHITE		Sets white LED maximum value
	Color Calibration	**On**			Uses factory default white setting
		Off			Uses maximum output values
		Custom	**RED**	**100–255**	Sets red LED maximum value
			GREEN		Sets green LED maximum value
			BLUE		Sets blue LED maximum value
	Reset Function	**Pan/Tilt**	**NO**		Reset individual functions or all functions from start-up
			YES		
		Zoom	**NO**		
			YES		
		All	**NO**		
			YES		
	Factory Set				Reset to factory default settings

Main Level	Programming Levels			Description
Sys Info	System Information	Ver	V_	Shows firmware version
		Running Mode	_ _ _	Shows current running mode
		DMX Address	_ _ _	Shows current starting address
		Temperature	_ _ _	Shows current product temperature in °C
		Fixture Time	_ _ _ _ _	Shows number of hours product has been powered on
		UID:	_ _ _ _ _ _ _ _ _	Shows product UID

Configuration (DMX)

Use control configurations to operate the product with a DMX controller.

Control Personalities

To set the control personality:

1. Go to the **Run Mode** main level.
2. Select the **DMX** option.
3. Select the desired personality, from **14CH**, **15CH**, **19CH**, or **21CH**.

- See the Starting Address section for the highest starting address you can select for each personality.
- Make sure that the starting addresses on the various products do not overlap due to the new personality setting.

Starting Address

Each product will respond to a unique starting address from the controller. All products with the same starting address will respond in unison. To set the starting address:

1. Go to the **Address** main level.
2. Select the starting address (**001**–**512**).
   - The highest recommended starting address for **14CH** is **499**.
   - The highest recommended starting address for **15CH** is **498**.
   - The highest recommended starting address for **19CH** is **494**.
   - The highest recommended starting address for **21CH** is **492**.

Control Channel Assignments and Values

Color Chart

DMX Value	Percent/Setting	Red Value	Green Value	Blue Value	White Value
000 ⇔ 004	**No function**	000	000	000	000
005 ⇔ 009	**Color 1**	000	000	000	255
010 ⇔ 014	**Color 2**	255	235	052	000
015 ⇔ 019	**Color 3**	214	134	048	000
020 ⇔ 024	**Color 4**	255	000	044	000
025 ⇔ 029	**Color 5**	255	059	113	000
030 ⇔ 034	**Color 6**	255	138	219	000
035 ⇔ 039	**Color 7**	226	175	226	000
040 ⇔ 044	**Color 8**	040	001	255	000
045 ⇔ 049	**Color 9**	000	000	255	000
050 ⇔ 054	**Color 10**	000	078	255	000
055 ⇔ 059	**Color 11**	000	199	255	000
060 ⇔ 064	**Color 12**	000	255	234	000
065 ⇔ 069	**Color 13**	149	246	255	000
070 ⇔ 074	**Color 14**	137	255	227	000
075 ⇔ 079	**Color 15**	213	220	222	000
080 ⇔ 084	**Color 16**	219	232	175	000
085 ⇔ 089	**Color 17**	205	255	199	000
090 ⇔ 094	**Color 18**	115	255	165	000
095 ⇔ 099	**Color 19**	006	255	143	000
100 ⇔ 104	**Color 20**	000	255	094	000
105 ⇔ 109	**Color 21**	029	255	000	000
110 ⇔ 114	**Color 22**	032	223	000	000
115 ⇔ 119	**Color 23**	075	255	000	000
120 ⇔ 124	**Color 24**	080	232	000	000
125 ⇔ 129	**Color 25**	108	226	000	000
130 ⇔ 134	**Color 26**	145	194	000	000
135 ⇔ 139	**Color 27**	210	255	000	000
140 ⇔ 144	**Color 28**	225	232	000	000
145 ⇔ 149	**Color 29**	023	215	000	000
150 ⇔ 154	**Color 30**	247	214	000	000
155 ⇔ 159	**Color 31**	255	163	000	000
160 ⇔ 164	**Color 32**	255	152	000	000
165 ⇔ 169	**Color 33**	255	108	000	000
170 ⇔ 174	**Color 34**	255	255	255	255
175 ⇔ 179	**No function**	000	000	000	000
180 ⇔ 201	**Color scroll, fast to slow**	Various	Various	Various	Various
202 ⇔ 207	**Hold**	Various	Various	Various	Various
208 ⇔ 229	**Reverse color scroll, fast to slow**	Various	Various	Various	Various
230 ⇔ 234	**No function**	000	000	000	000
235 ⇔ 249	**Color snap, fast to slow**	Various	Various	Various	Various
250 ⇔ 255	**No function**	000	000	000	000

21CH

Channel	Function	Value	Percent/Setting
1	Pan	000 ⇔ 255	0–100%
2	Fine Pan	000 ⇔ 255	Fine control (16-bit)
3	Tilt	000 ⇔ 255	0–100%
4	Fine Tilt	000 ⇔ 255	Fine control (16-bit)
5	Pan/Tilt Speed	000 ⇔ 255	Fast to slow
6	Dimmer	000 ⇔ 255	0–100%
7	Fine Dimmer	000 ⇔ 255	Fine control (16-bit)
8	Strobe	000 ⇔ 019	Off
		020 ⇔ 024	On
		025 ⇔ 064	Strobe, fast to slow
		065 ⇔ 069	On
		070 ⇔ 084	Fast on, slow off (fast to slow)
		085 ⇔ 089	On
		090 ⇔ 104	Slow on, fast off (fast to slow)
		105 ⇔ 109	On
		110 ⇔ 124	Random strobe, fast to slow
		125 ⇔ 129	On
		130 ⇔ 144	Random fast on, slow off (fast to slow)
		145 ⇔ 149	On
		150 ⇔ 164	Random slow on, fast off (fast to slow)
		165 ⇔ 169	On
		170 ⇔ 184	Pulse strobe, fast to slow
		185 ⇔ 189	On
		190 ⇔ 204	Random pulse strobe, fast to slow
		205 ⇔ 209	On
		210 ⇔ 224	Slow on, slow off (fast to slow)
		225 ⇔ 229	On
		230 ⇔ 244	Pulse strobe, fast to slow
		245 ⇔ 255	On
9	Red	000 ⇔ 255	0–100%
10	Fine Red	000 ⇔ 255	Fine control (16-bit)
11	Green	000 ⇔ 255	0–100%
12	Fine Green	000 ⇔ 255	Fine control (16-bit)
13	Blue	000 ⇔ 255	0–100%
14	Fine Blue	000 ⇔ 255	Fine control (16-bit)
15	White	000 ⇔ 255	0–100%
16	Fine White	000 ⇔ 255	Fine control (16-bit)
17	Color	000 ⇔ 255	See the Color Chart
18	Zoom	000 ⇔ 255	0–100%

Channel	Function	Value	Percent/Setting
19	**Movement Macros**	000 ⇔ 007	No function
		008 ⇔ 023	Movement macro 1
		024 ⇔ 039	Movement macro 2
		040 ⇔ 055	Movement macro 3
		056 ⇔ 071	Movement macro 4
		072 ⇔ 087	Movement macro 5
		088 ⇔ 103	Movement macro 6
		104 ⇔ 119	Movement macro 7
		120 ⇔ 135	Movement macro 8
		136 ⇔ 151	Movement macro 9
		152 ⇔ 167	Movement macro 10
		168 ⇔ 183	Movement macro 11
		184 ⇔ 199	Movement macro 12
		200 ⇔ 215	Movement macro 13
		216 ⇔ 231	Movement macro 14
		232 ⇔ 247	Movement macro 15
		248 ⇔ 255	Movement macro 16
20	**Movement Macro Speed**	000 ⇔ 255	Movement macro speed, fast to slow
21	**Control** (5 second activation delay)	000 ⇔ 009	No function
		010 ⇔ 014	Blackout during pan/tilt
		015 ⇔ 049	No function
		050 ⇔ 054	Pan reset
		055 ⇔ 059	Tilt reset
		060 ⇔ 064	Zoom reset
		065 ⇔ 069	No function
		070 ⇔ 074	Reset all
		075 ⇔ 079	No function
		080 ⇔ 084	Reverse pan and tilt movement
		085 ⇔ 089	Reverse pan movement
		090 ⇔ 094	Reverse tilt movement
		095 ⇔ 099	Normal pan movement
		100 ⇔ 104	Normal tilt movement
		105 ⇔ 109	Normal pan and tilt movement
		110 ⇔ 119	No function
		120 ⇔ 124	Fan ECO mode
		125 ⇔ 129	Fan full speed
		130 ⇔ 134	Fan auto mode
		135 ⇔ 139	Fast dimmer
		140 ⇔ 144	Smooth dimmer
		145 ⇔ 149	Linear dimmer curve
		150 ⇔ 154	Square dimmer curve
		155 ⇔ 159	Inverse square dimmer curve
		160 ⇔ 164	S-curve dimmer curve
		165 ⇔ 169	White mode on
		170 ⇔ 174	White mode off (full mode)
		175 ⇔ 179	Color calibration off (single color)
		180 ⇔ 184	Color calibration on (single color)
		185 ⇔ 239	No function
		240 ⇔ 247	Color calibration on
		248 ⇔ 255	Color calibration off

19CH

Channel	Function	Value	Percent/Setting
1	Pan	000 ⇔ 255	0–100%
2	Fine Pan	000 ⇔ 255	Fine control (16-bit)
3	Tilt	000 ⇔ 255	0–100%
4	Fine Tilt	000 ⇔ 255	Fine control (16-bit)
5	Pan/Tilt Speed	000 ⇔ 255	Fast to slow
6	Dimmer	000 ⇔ 255	0–100%
7	Fine Dimmer	000 ⇔ 255	Fine control (16-bit)
8	Strobe	000 ⇔ 019	Off
		020 ⇔ 024	On
		025 ⇔ 064	Strobe, fast to slow
		065 ⇔ 069	On
		070 ⇔ 084	Fast on, slow off (fast to slow)
		085 ⇔ 089	On
		090 ⇔ 104	Slow on, fast off (fast to slow)
		105 ⇔ 109	On
		110 ⇔ 124	Random strobe, fast to slow
		125 ⇔ 129	On
		130 ⇔ 144	Random fast on, slow off (fast to slow)
		145 ⇔ 149	On
		150 ⇔ 164	Random slow on, fast off (fast to slow)
		165 ⇔ 169	On
		170 ⇔ 184	Pulse strobe, fast to slow
		185 ⇔ 189	On
		190 ⇔ 204	Random pulse strobe, fast to slow
		205 ⇔ 209	On
		210 ⇔ 224	Slow on, slow off (fast to slow)
		225 ⇔ 229	On
		230 ⇔ 244	Pulse strobe, fast to slow
		245 ⇔ 255	On
9	Red	000 ⇔ 255	0–100%
10	Fine Red	000 ⇔ 255	Fine control (16-bit)
11	Green	000 ⇔ 255	0–100%
12	Fine Green	000 ⇔ 255	Fine control (16-bit)
13	Blue	000 ⇔ 255	0–100%
14	Fine Blue	000 ⇔ 255	Fine control (16-bit)
15	White	000 ⇔ 255	0–100%
16	Fine White	000 ⇔ 255	Fine control (16-bit)
17	Color	000 ⇔ 255	See the Color Chart
18	Zoom	000 ⇔ 255	0–100%

Channel	Function	Value	Percent/Setting
19	**Control** (5 second activation delay)	000 ⇔ 009	No function
		010 ⇔ 014	Blackout during pan/tilt
		015 ⇔ 049	No function
		050 ⇔ 054	Pan reset
		055 ⇔ 059	Tilt reset
		060 ⇔ 064	Zoom reset
		065 ⇔ 069	No function
		070 ⇔ 074	Reset all
		075 ⇔ 079	No function
		080 ⇔ 084	Reverse pan and tilt movement
		085 ⇔ 089	Reverse pan movement
		090 ⇔ 094	Reverse tilt movement
		095 ⇔ 099	Normal pan movement
		100 ⇔ 104	Normal tilt movement
		105 ⇔ 109	Normal pan and tilt movement
		110 ⇔ 119	No function
		120 ⇔ 124	Fan ECO mode
		125 ⇔ 129	Fan full speed
		130 ⇔ 134	Fan auto mode
		135 ⇔ 139	Fast dimmer
		140 ⇔ 144	Smooth dimmer
		145 ⇔ 149	Linear dimmer curve
		150 ⇔ 154	Square dimmer curve
		155 ⇔ 159	Inverse square dimmer curve
		160 ⇔ 164	S-curve dimmer curve
		165 ⇔ 169	White mode on
		170 ⇔ 174	White mode off (full mode)
		175 ⇔ 179	Color calibration off (single color)
		180 ⇔ 184	Color calibration on (single color)
		185 ⇔ 239	No function
		240 ⇔ 247	Color calibration on
		248 ⇔ 255	Color calibration off

15CH

Channel	Function	Value	Percent/Setting
1	**Pan**	000 ⇔ 255	0–100%
2	**Fine Pan**	000 ⇔ 255	Fine control (16-bit)
3	**Tilt**	000 ⇔ 255	0–100%
4	**Fine Tilt**	000 ⇔ 255	Fine control (16-bit)
5	**Pan/Tilt Speed**	000 ⇔ 255	Fast to slow
6	**Dimmer**	000 ⇔ 255	0–100%
7	**Fine Dimmer**	000 ⇔ 255	Fine control (16-bit)
8	**Strobe**	000 ⇔ 019	Off
		020 ⇔ 024	On
		025 ⇔ 064	Strobe, fast to slow
		065 ⇔ 069	On
		070 ⇔ 084	Fast on, slow off (fast to slow)
		085 ⇔ 089	On
		090 ⇔ 104	Slow on, fast off (fast to slow)
		105 ⇔ 109	On
		110 ⇔ 124	Random strobe, fast to slow
		125 ⇔ 129	On
		130 ⇔ 144	Random fast on, slow off (fast to slow)
		145 ⇔ 149	On
		150 ⇔ 164	Random slow on, fast off (fast to slow)
		165 ⇔ 169	On
		170 ⇔ 184	Pulse strobe, fast to slow
		185 ⇔ 189	On
		190 ⇔ 204	Random pulse strobe, fast to slow
		205 ⇔ 209	On
		210 ⇔ 224	Slow on, slow off (fast to slow)
		225 ⇔ 229	On
		230 ⇔ 244	Pulse strobe, fast to slow
		245 ⇔ 255	On
9	**Red**	000 ⇔ 255	0–100%
10	**Green**	000 ⇔ 255	0–100%
11	**Blue**	000 ⇔ 255	0–100%
12	**White**	000 ⇔ 255	0–100%
13	**Color**	000 ⇔ 255	See the Color Chart
14	**Zoom**	000 ⇔ 255	0–100%

Channel	Function	Value	Percent/Setting
15	**Control** (5 second activation delay)	000 ⇔ 009	No function
		010 ⇔ 014	Blackout during pan/tilt
		015 ⇔ 049	No function
		050 ⇔ 054	Pan reset
		055 ⇔ 059	Tilt reset
		060 ⇔ 064	Zoom reset
		065 ⇔ 069	No function
		070 ⇔ 074	Reset all
		075 ⇔ 079	No function
		080 ⇔ 084	Reverse pan and tilt movement
		085 ⇔ 089	Reverse pan movement
		090 ⇔ 094	Reverse tilt movement
		095 ⇔ 099	Normal pan movement
		100 ⇔ 104	Normal tilt movement
		105 ⇔ 109	Normal pan and tilt movement
		110 ⇔ 119	No function
		120 ⇔ 124	Fan ECO mode
		125 ⇔ 129	Fan full speed
		130 ⇔ 134	Fan auto mode
		135 ⇔ 139	Fast dimmer
		140 ⇔ 144	Smooth dimmer
		145 ⇔ 149	Linear dimmer curve
		150 ⇔ 154	Square dimmer curve
		155 ⇔ 159	Inverse square dimmer curve
		160 ⇔ 164	S-curve dimmer curve
		165 ⇔ 169	White mode on
		170 ⇔ 174	White mode off (full mode)
		175 ⇔ 179	Color calibration off (single color)
		180 ⇔ 184	Color calibration on (single color)
		185 ⇔ 239	No function
		240 ⇔ 247	Color calibration on
		248 ⇔ 255	Color calibration off

14CH

Channel	Function	Value	Percent/Setting
1	**Pan**	000 ⇔ 255	0–100%
2	**Fine Pan**	000 ⇔ 255	Fine control (16-bit)
3	**Tilt**	000 ⇔ 255	0–100%
4	**Fine Tilt**	000 ⇔ 255	Fine control (16-bit)
5	**Pan/Tilt Speed**	000 ⇔ 255	Fast to slow
6	**Dimmer**	000 ⇔ 255	0–100%
7	**Strobe**	000 ⇔ 019	Off
		020 ⇔ 024	On
		025 ⇔ 064	Strobe, fast to slow
		065 ⇔ 069	On
		070 ⇔ 084	Fast on, slow off (fast to slow)
		085 ⇔ 089	On
		090 ⇔ 104	Slow on, fast off (fast to slow)
		105 ⇔ 109	On
		110 ⇔ 124	Random strobe, fast to slow
		125 ⇔ 129	On
		130 ⇔ 144	Random fast on, slow off (fast to slow)
		145 ⇔ 149	On
		150 ⇔ 164	Random slow on, fast off (fast to slow)
		165 ⇔ 169	On
		170 ⇔ 184	Pulse strobe, fast to slow
		185 ⇔ 189	On
		190 ⇔ 204	Random pulse strobe, fast to slow
		205 ⇔ 209	On
		210 ⇔ 224	Slow on, slow off (fast to slow)
		225 ⇔ 229	On
		230 ⇔ 244	Pulse strobe, fast to slow
		245 ⇔ 255	On
8	**Red**	000 ⇔ 255	0–100%
9	**Green**	000 ⇔ 255	0–100%
10	**Blue**	000 ⇔ 255	0–100%
11	**White**	000 ⇔ 255	0–100%
12	**Color**	000 ⇔ 255	See the Color Chart
13	**Zoom**	000 ⇔ 255	0–100%

Channel	Function	Value	Percent/Setting
14	**Control** (5 second activation delay)	000 ⇔ 009	No function
		010 ⇔ 014	Blackout during pan/tilt
		015 ⇔ 049	No function
		050 ⇔ 054	Pan reset
		055 ⇔ 059	Tilt reset
		060 ⇔ 064	Zoom reset
		065 ⇔ 069	No function
		070 ⇔ 074	Reset all
		075 ⇔ 079	No function
		080 ⇔ 084	Reverse pan and tilt movement
		085 ⇔ 089	Reverse pan movement
		090 ⇔ 094	Reverse tilt movement
		095 ⇔ 099	Normal pan movement
		100 ⇔ 104	Normal tilt movement
		105 ⇔ 109	Normal pan and tilt movement
		110 ⇔ 119	No function
		120 ⇔ 124	Fan ECO mode
		125 ⇔ 129	Fan full speed
		130 ⇔ 134	Fan auto mode
		135 ⇔ 139	Fast dimmer
		140 ⇔ 144	Smooth dimmer
		145 ⇔ 149	Linear dimmer curve
		150 ⇔ 154	Square dimmer curve
		155 ⇔ 159	Inverse square dimmer curve
		160 ⇔ 164	S-curve dimmer curve
		165 ⇔ 169	White mode on
		170 ⇔ 174	White mode off (full mode)
		175 ⇔ 179	Color calibration off (single color)
		180 ⇔ 184	Color calibration on (single color)
		185 ⇔ 239	No function
		240 ⇔ 247	Color calibration on
		248 ⇔ 255	Color calibration off

Configuration (Settings)

Pan Reverse

To set the orientation of the pan:

1. Go to the **Setup** main level.
2. Select the **Pan Reverse** option.
3. Select from **OFF** (normal pan motion), or **ON** (reversed pan motion).

Tilt Reverse

To set the orientation of the tilt:

1. Go to the **Setup** main level.
2. Select the **Tilt Reverse** option.
3. Select from **OFF** (normal tilt motion), or **ON** (reversed tilt motion).

Pan Angle

To set the maximum angle of the pan:

1. Go to the **Setup** main level.
2. Select the **Pan Angle** option.
3. Select from **540** (540°), **360** (360°), or **180** (180°).

Tilt Angle

To set the maximum angle of the tilt:

1. Go to the **Setup** main level.
2. Select the **Tilt Angle** option.
3. Select from **230** (230°), **180** (180°), or **90** (90°).

Fan Mode

To set the fan speed mode:

1. Go to the **Setup** main level.
2. Select the **Fans** option.
3. Select the fan mode, from **Auto** (fan speed adjusts to product temperature), **ECO** (quiet mode), or **Full** (fan speed at maximum).

Display Backlight

To set whether an inactive display will turn off:

1. Go to the **Setup** main level.
2. Select the **Display** option.
3. Select **OFF** (turns off when inactive) or **ON** (always on).

Screen Reverse

To set the orientation of the display:

1. Go to the **Setup** main level.
2. Select the **Screen Rev** option.
3. Select from **OFF** (right-side up) or **ON** (upside-down).

Dimmer Curve

To set the dimmer curve:

1. Go to the **Setup** main level.
2. Select the **Dimmer Curve** option.
3. Select the dimmer curve, from **Linear**, **Square**, **I Squa**, or **SCurve**.

Dimmer Speed

To set the dimmer speed mode:

1. Go to the **Setup** main level.
2. Select the **Dimmer Speed** option.
3. Select the dimmer curve, from **Smooth** or **Fast**.

Pulse-Width Modulation Options

To set the PWM frequency:

1. Go to the **Setup** main level.
2. Select the **PWM Option** option.
3. Select the frequency, from **600Hz**, **1200Hz**, **4000Hz**, **6000Hz**, or **15000Hz**.

LED Power (Legacy Mode)

To adjust the power for each color of LED, so as to match the output to a legacy Rogue Wash product:

1. Go to the **Setup** main level.
2. Select the **LED R POWER** (red), **LED G POWER** (green), **LED B POWER** (blue), or **LED W POWER** (white) option.
3. Increase or decrease the power of the selected color, from **050–100**.

Match each color of the Rogue R1 Beam Wash one at a time with each individual color of the legacy Rogue Wash product(s). This ensures an equal output and color balance from each product.

4. Repeat steps 2 and 3 until the output of the Rogue R1 Beam Wash is identical to the output of the legacy Rogue Wash product(s).

White Mode

To turn the White Mode on or off, or edit the balance of the White Mode:

1. Go to the **Setup** main level.
2. Select the **White Mode** option.
3. Select **On** (to calibrate the color temperature to 7500K), **Off** (to sets all colors to maximum output), or **Custom** (to customize the White Mode).
4. If **Custom** was selected, then select which color to edit, from **RED**, **GREEN**, **BLUE**, or **WHITE**.
5. Increase or decrease the maximum output level of the selected color, from **000–255**.

Color Calibration

To alter the color calibration settings:

1. Go to the **Setup** main level.
2. Select the **Color Calibration** option.
3. Select the calibration mode, from **On** (Uses factory default settings), **Off** (Sets all colors to maximum output), or **Custom** (To set a custom white balance).
4. If **Custom** was selected, then select which color to edit, from **RED**, **GREEN**, or **BLUE**.
5. Increase or decrease the maximum output level of the selected color, from **100–255**.

Reset Function

To reset specific functions or the entire product:

1. Go to the **Setup** main level.
2. Select the **Reset Function** option.
3. Select the functions to reset, from **Pan/Tilt**, **Zoom**, or **All**.
4. Select **NO** (to cancel) or **YES** (to reset the selected functions).

Factory Reset

To reset the product to factory settings:

1. Go to the **Setup** main level.
2. Select the **Factory Set** option.

Test Mode

Auto Test

To have the Rogue R1 Beam Wash automatically test all functions one after the other:

1. Go to the **Run Mode** main level.
2. Select the **Auto Test** option.

Manual Test

To manually test an individual function of the Rogue R1 Beam Wash:

1. Go to the **Run Mode** main level.
2. Select the **Manual Test** option.
3. Select a function to test, from **Pan**, **Tilt**, **Dimmer**, **Shutter**, **Red**, **Green**, **Blue**, **White**, or **Zoom**.
4. Increase or decrease the value of the selected function from **000–255** to test it.

System Information

The information section of the menu displays statistics and the current status of the product's various functions. To view these information sections:

1. Go to the **Sys Info** main level.
2. Select the **System Information** option.

Offset Mode (Zero Adjust)

The Offset mode provides fine adjustments for the home position of every moving part in the optical path as well as the pan and tilt movements. To adjust these options and prevent borders showing or reduction of the light output:

1. From the main level screen, press and hold **<MENU>** until the passcode screen appears.
2. Enter the passcode: **2323** and press **<ENTER>**.
3. Select the "zero" position to adjust, from **PAN**, **TILT**, or **ZOOM**.
4. Adjust the "zero" position for the selected function from **000–255**.

5. Maintenance

Product Maintenance

Dust build-up reduces light output performance and can cause overheating. This can lead to reduction of the light source's life and/or mechanical wear. To maintain optimum performance and minimize wear, clean your lighting products at least twice a month. However, be aware that usage and environmental conditions could be contributing factors to increase the cleaning frequency.

To clean the product, follow the instructions below:

1. Unplug the product from power.
2. Wait until the product is at room temperature.
3. Use a vacuum (or dry compressed air) and a soft brush to remove dust collected on the external surface/vents.
4. Clean all transparent surfaces with a mild soap solution or ammonia-free glass cleaner.
5. Apply the solution directly to a soft, lint free cotton cloth or a lens cleaning tissue.
6. Softly drag any dirt or grime to the outside of the transparent surface.
7. Gently polish the transparent surfaces until they are free of haze and lint.

Always dry the transparent surfaces carefully after cleaning them.

Do not spin the cooling fans with compressed air. Damage may result.

6. Technical Specifications

Dimensions and Weight

Length	Width	Height	Weight
8.42 in (214 mm)	6.29 in (160 mm)	14.52 in (369 mm)	11.8 lb (5.35 kg)

Note: Dimensions in inches are rounded.

Power

Power Supply Type	Range	Voltage Selection
Switching (internal)	100 to 240 VAC, 50/60 Hz	Auto-ranging

Parameter	120 V, 60 Hz	208 V, 60 Hz	230 V, 50 Hz
Consumption	284 W	297 W	271 W
Operating Current	2.38 A	1.37 A	1.215 A
Power linking current (products)	13.6 A (5 products)	13.6 A (9 products)	13.6 A (11 products)
Fuse/Breaker	F 4 A, 250 V	F 4 A, 250 V	F 4 A, 250 V

Power I/O	U.S./Worldwide	UK/Europe
Power Input Connector	Neutrik® powerCON® A	Neutrik® powerCON® A
Power Output Connector	Neutrik® powerCON® B	Neutrik® powerCON® B
Power Cord plug	Edison (U.S.)	Local Plug

Light Source

Type	Color	Quantity	Power	Current	Lifespan
LED	Quad-color RGBW	7	40 W	980 mA	50,000 hours

Photometrics

Beam Angle	Field Angle	Zoom Angle
4° to 37.8°	5° to 58.2°	5° to 58.2°

Illuminance @ 5 m (5°)	Illuminance @ 5 m (55°)	Color Temperature Range
13,939 lux	383 lux	2800 to 10000 K

Thermal

Maximum External Temperature	Cooling System
113 °F (45 °C)	Fan-assisted Convection

DMX

I/O Connector	Channel Range
5-pin XLR	14, 15, 19 or 21

Ordering

Product Name	Item Name	Item Code	UPC Number
Rogue R1 Beam Wash	ROGUER1BW	08011620	781462219680

UL 1573
CSA C22.2 No. 166
E113093

Returns

Send the product prepaid, in the original box, and with the original packing and accessories. Chauvet will not issue call tags.
Call Chauvet and request a Return Merchandise Authorization (RMA) number before shipping the product. Be prepared to provide the model number, serial number, and a brief description of the cause(s) for the return.
To submit a service request online, go to www.chauvetprofessional.com/service-request.
Clearly label the package with an RMA number. Chauvet will refuse any product returned without an RMA number.

Write the RMA number on a properly affixed label. DO NOT write the RMA number directly on the box.

Before sending the product, clearly write the following information on a piece of paper and place it inside the box:

- Your name
- Your address
- Your phone number
- RMA number
- A brief description of the problem

Be sure to pack the product properly. Any shipping damage resulting from inadequate packaging will be your responsibility. FedEx packing or double-boxing are recommended.

Chauvet reserves the right to use its own discretion to repair or replace returned product(s).

Contact Us

General Information	Technical Support
Chauvet World Headquarters	
Address: 5200 NW 108th Ave. Sunrise, FL 33351 Voice: (954) 577-4455 Fax: (954) 929-5560 Toll Free: (800) 762-1084	Voice: (844) 393-7575 Fax: (954) 756-8015 Email: chauvetcs@chauvetlighting.com Website: www.chauvetprofessional.com
Chauvet Europe Ltd	
Address: Unit 1C Brookhill Road Industrial Estate Pinxton, Nottingham, UK NG16 6NT Voice: +44 (0) 1773 511115 Fax: +44 (0) 1773 511110	Email: UKtech@chauvetlighting.eu Website: www.chauvetprofessional.eu
Chauvet Europe BVBA	
Address: Stokstraat 18 9770 Kruishoutem Belgium Voice: +32 9 388 93 97	Email: BNLtech@chauvetlighting.eu Website: www.chauvetprofessional.eu
Chauvet France	
Address: 3, Rue Ampère 91380 Chilly-Mazarin France Voice: +33 1 78 85 33 59	Email: FRtech@chauvetlighting.fr Website: www.chauvetprofessional.eu
Chauvet Germany	
Address: Bruno-Bürgel-Str. 11 28759 Bremen Germany Voice: +49 421 62 60 20	Email: DEtech@chauvetlighting.de Website: www.chauvetprofessional.eu
Chauvet Mexico	
Address: Av. de las Partidas 34 - 3B (Entrance by Calle 2) Zona Industrial Lerma Lerma, Edo. de México, CP 52000 Voice: +52 (728) 690-2010	Email: servicio@chauvet.com.mx Website: www.chauvetprofessional.mx

Visit the applicable website above to verify our contact information and instructions to request support. Outside the U.S., U.K., Ireland, Benelux, France, Germany, or Mexico, contact the dealer of record.