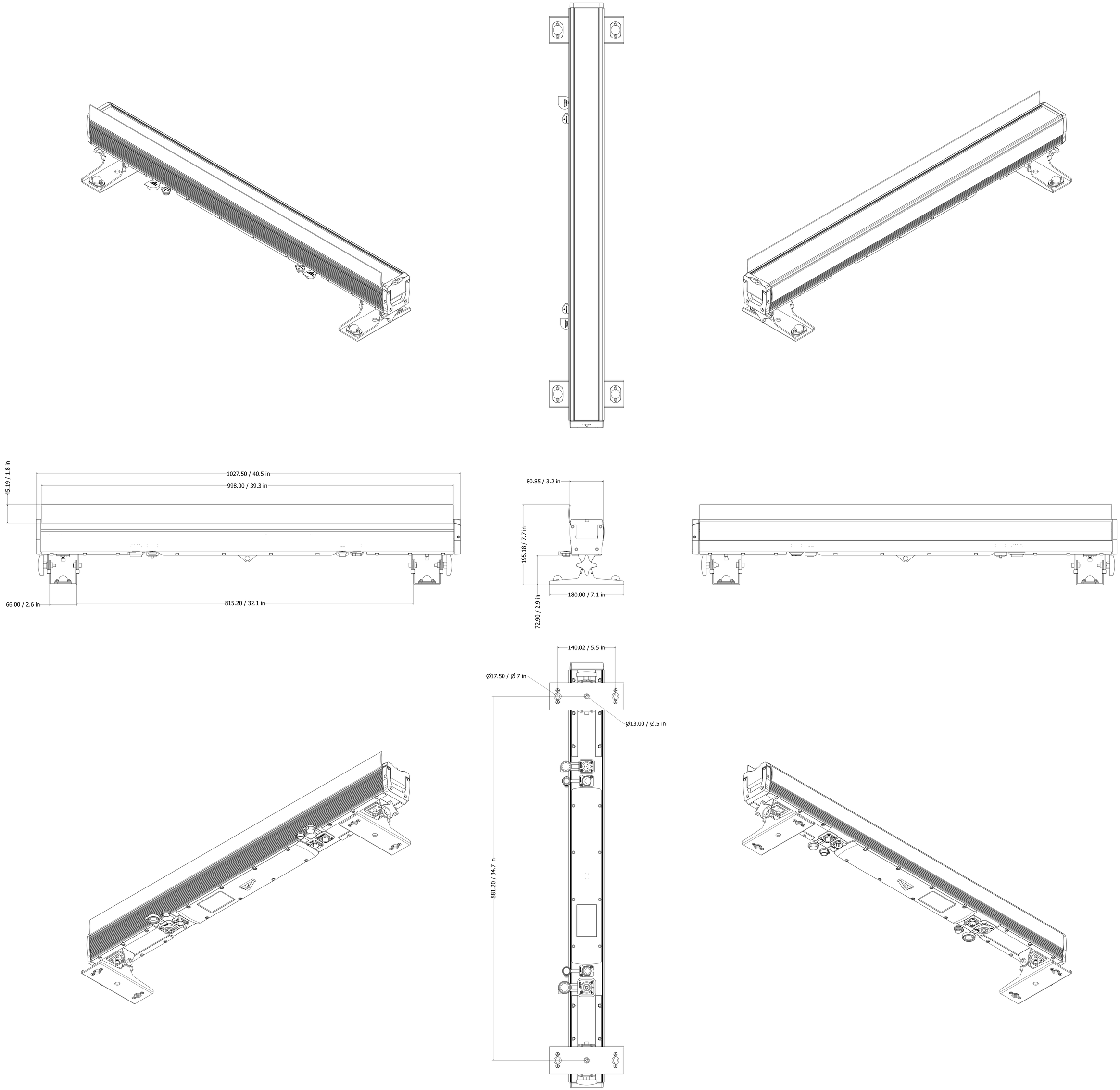

DRAWN		TITLE
Ozkoch	2/26/2019	CHAUVET Rubin 720

© Chauvet & Sons, LLC 2019
All Product specifications and dimensions are subject to change without notice.